RoHS COMPLIANT

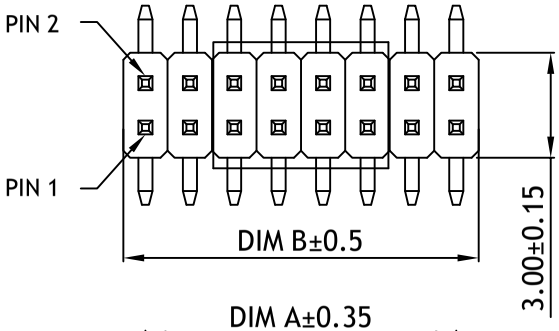

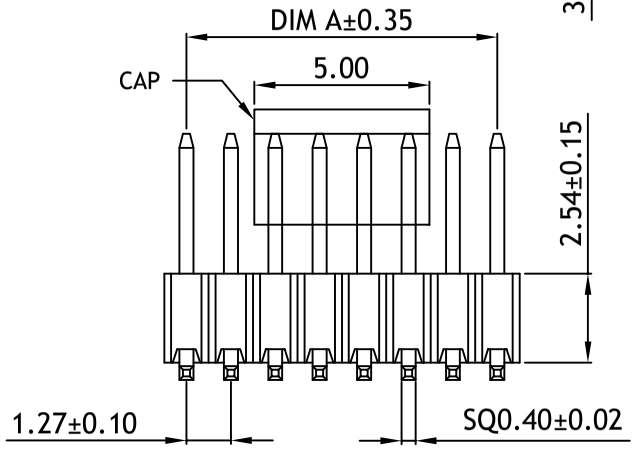

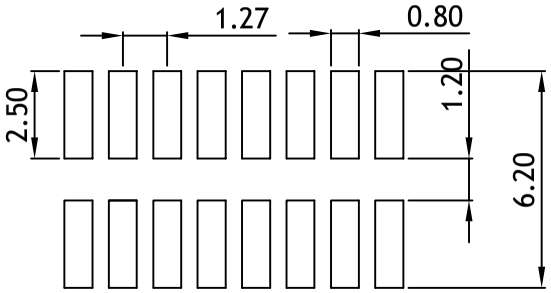

RECOMMENDED P.C.B.LAYOUT
ALL TOLERANCES ARE±0.05

技术参数/Technical parameters

1 符合规范/Accord With Norm:EIA-364C
2 额定电流/Current Rating :2AMP
3 绝缘阻抗/Insulator Resistance :1000MΩ Min.
4 接触阻抗/Contact Resistance :20mΩ Max.
5 耐电压值/Voltage Resistance :AC 500V
6 工作温度/Operating Temperature :-40℃ To +105℃
7 金属材料/Metallic Material :Brass
8 金属处理/Metal Treatment :Ni30U"+ Au 0. 5~0. 8u
9 绝缘材料/Insulator Material: LCP+30%GF UL94V-0
10 耐焊接热/Soldering Temperature :260°C ±5°C 10S MAX

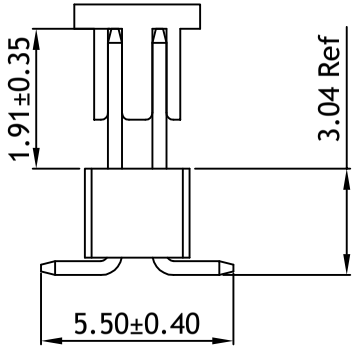

PIN No.	DIM A	DIM B	PIN No.	DIM A	DIM B
04	1.27	2.54	52	31.75	33.02
06	2.54	3.81	54	33.02	34.29
08	3.81	5.08	56	34.29	35.56
10	5.08	6.35	58	35.56	36.83
12	6.35	7.62	60	36.83	38.10
14	7.62	8.89	62	38.10	39.37
16	8.89	10.16	64	39.37	40.64
18	10.16	11.43	66	40.64	41.91
20	11.43	12.70	68	41.91	43.18
22	12.70	13.97	70	43.18	44.45
24	13.97	15.24	72	44.45	45.72
26	15.24	16.51	74	45.72	46.99
28	16.51	17.78	76	46.99	48.26
30	17.78	19.05	78	48.26	49.53
32	19.05	20.32	80	49.53	50.80
34	20.32	21.59	82	50.80	52.07
36	21.59	22.86	84	52.07	53.34
38	22.86	24.13	86	53.34	54.61
40	24.13	25.40	88	54.61	55.88
42	25.40	26.67	90	55.88	57.15
44	26.67	27.94	92	57.15	58.42
46	27.94	29.21	94	58.42	59.69
48	29.21	30.48	96	59.69	60.96
50	30.48	31.75	98	60.96	62.23
			100	62.23	63.50

Part number Information:

DW-PH-2 127288WVnP-XX TR- 03

- Dual Row
- Pitch 1.27mm
- **Total PINS**
- **Terminal Plating**
  - **01:Gold Flash**
  - **03:3u" Gold**
  - **06:6u" Gold**
  - **15:15u" Gold**
  - **30:30u" Gold**
  - **31:Sn**
  - **32:Ni**
- **TR:Tape Reel**
- **Series 01-99**

ECN NO.	REV	DATE	DESCRIPTION	CHANGE	APPRO.
	A-0	2018.08.13	NEW	Aple	Rix

GENERAL TOLERANCE UNLESS OTHERWISE NOTED	
Angle	±2°
X.	±0.45
X.X	±0.38
X.XX	±0.25
X.XXX	±0.15

DESIGN	Aple	2018.08.13
CHECK	Jason	2018.08.13
APPROVAL	Rix	2018.08.13

SCALE: N/A UNIT:mm A4 SHEET: 1 of 1

龍威電子有限公司
Dragon Well Ele Dragon Well Electronics Co.,Ltd

TITLE: 1.27PIN HEADER DUAL ROWS SMT TYPE BASE 2.54H

MODEL NO. DW-PH-2127288WVnP-XXTR-03

THIS DRAWING CONTAINS INFORMATION THAT IS PROPRIETAPY TO DRAGON WELL AND SHOULD NOT BE USED WITHOUT WRITTEN PERMISSION