RoHS COMPLIANT

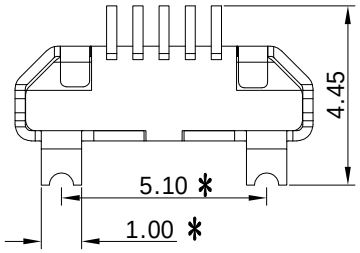

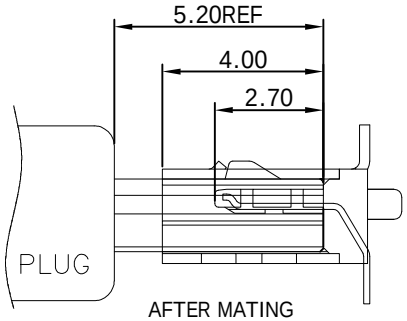

AFTER MATING
SECTION A-A

PIN NO	NAME
1	VBUS
2	D-
3	D+
4	ID
5	GND

Note:
1.Material:
1.1 Housing: High temperature thermoplastic with g.f,UL94v-0
1.2 Contact: copper alloy,t=0.15mm Gold Flash Plated over all NICKEL 30u"MIN UNDER PLATING OVER ALL.
1.3 Shell: SUS304,t=0.25mm MATTE NICKEL 50u"MIN PLATED OVERALL.
2.Specification:
2.1 Current rating:1,5PIN 1.8A Max/2,3,4PIN 1A Max.
2.2 Dielectric withstanding voltage: 100 V(ac) for 1 min.
2.3 Contact resistance: 30 mΩ Max.
2.4 Insulation resistance: 100 MΩ Min.
2.5 Total mating force: 3.57 Kgf Max.
2.6 Total unmating force: 1.0 Kgf Min.
2.7 Temperature range: -30°C~80°C

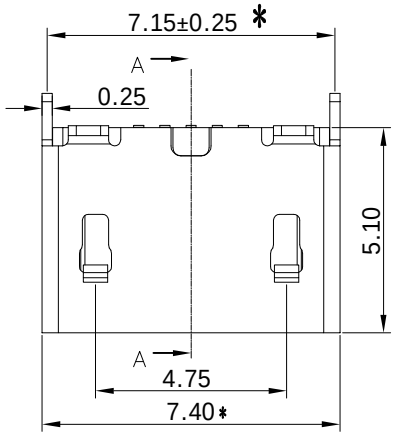

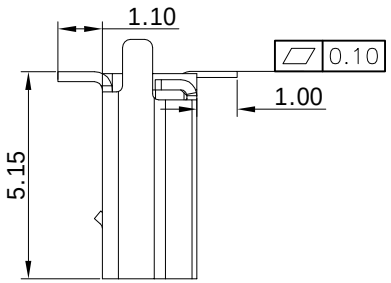

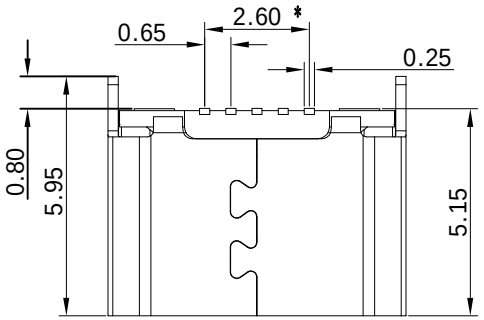

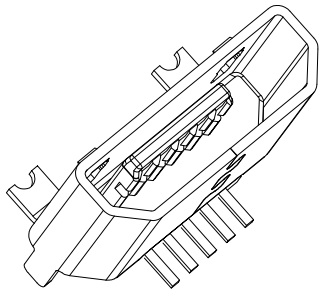

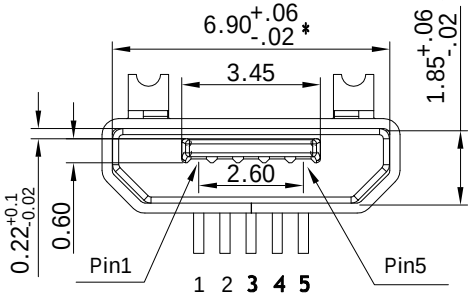

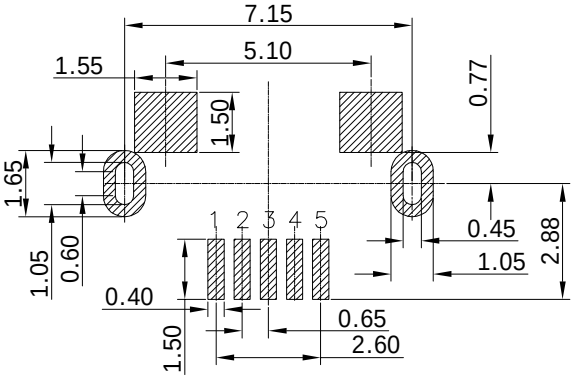

RECOMMENDED PCB LAYOUT(TOP VIEW)
GENERAL TOLERANCES:±0.05

Part number Information:

DW-MCB-CB5210-XX TR-01

Contact Plating
01:Gold Flash Plating on Mating Area
03:3u" Gold Plating on Mating Area
05:5u" Gold Plating on Mating Area
15:15u" Gold Plating on Mating Area
30:30u" Gold Plating on Mating Area

TR:Tape Reel

Series
01-99

ECN NO.	REV	DATE	DESCRIPTION	CHANGE	APPRO.
	A-0	2023.09.16	NEW	Michael	Rix

GENERAL TOLERANCE UNLESS OTHERWISE NOTED	
Angle	±2°
X.	±0.5
X.X	±0.35
X.XX	±0.30

DESIGN	Aple	2023.09.16
CHECK	Jason	2023.09.16
APPROVAL	Rix	2023.09.16

SCALE: N/A UNIT:mm A4 SHEET: 1 of 1

龍威電子有限公司
Dragon Well Ele Dragon Well Electronics Co.,Ltd

TITLE: Micro usb 5s B型180度 SMT 无导位
MODEL NO. DW-MCB-CB5210-XXTR-01

THIS DRAWING CONTAINS INFORMATION THAT IS PROPRIETAPY TO DRAGON WELL AND SHOULD NOT BE USED WITHOUT WRITTEN PERMISSION