RoHS COMPLIANT

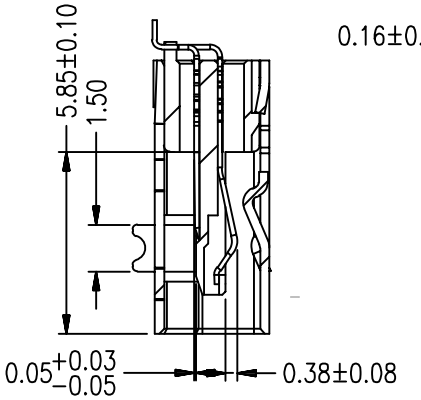

SECTION A-A
SCALE 1:1

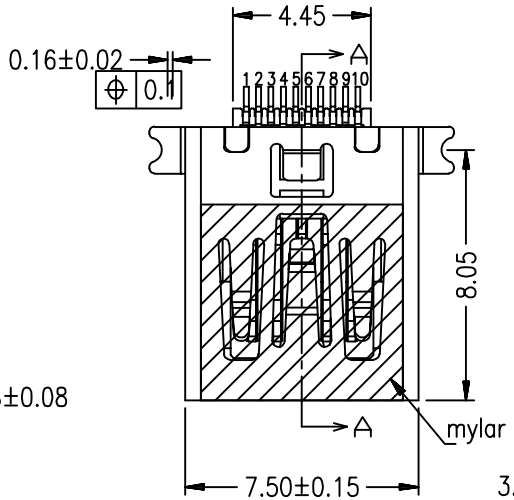

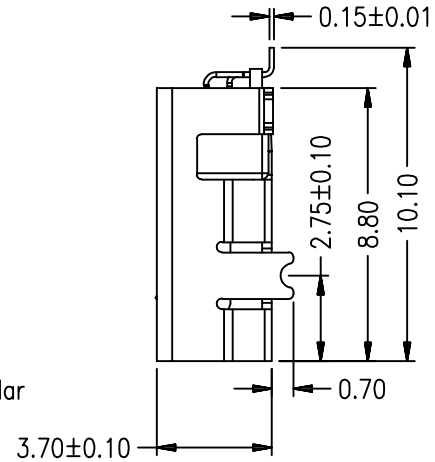

1.材质:
1.1胶芯:LCP UL94V-0
1.2端子:C5210,镀金1μ"或3μ"
1.3外壳:C2680,镀雾锡80μ"以上或外壳镀全镍80μ"以上
2.主要特性:
2.1额定电流:1.0A
2.2接触阻抗:50mΩ MAX
2.3绝缘阻抗:100MΩ MIN 100V DC
2.4耐压测试:100V AC
2.5沾锡性:温度235±5℃,时间5±0.5s
2.6整体插入力:3.57kgf MAX 整体拔出力:0.71kgf MIN
2.7使用寿命:5000次
2.8耐温性:烤箱测试:温度250±5℃,时间2分钟
2.9工作环境:温度:-30℃~+80℃;湿度:80% MAX
3.0圆圈标记尺寸表示重点检验尺寸,CPK值不小于1.33。

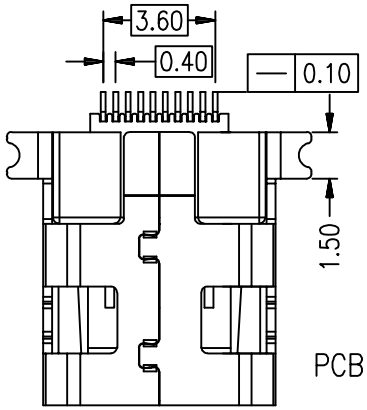

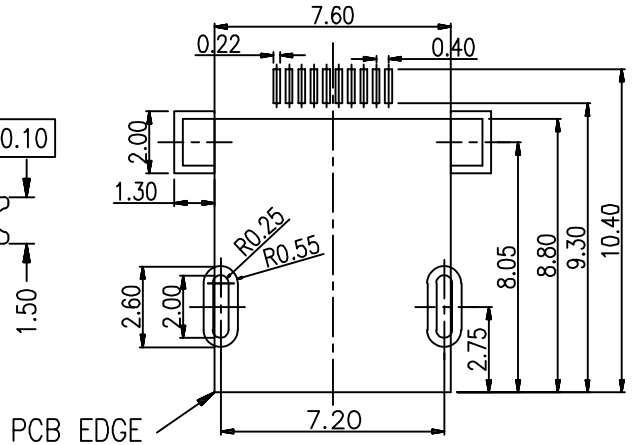

RECOMMANDED PCB LAYOUT

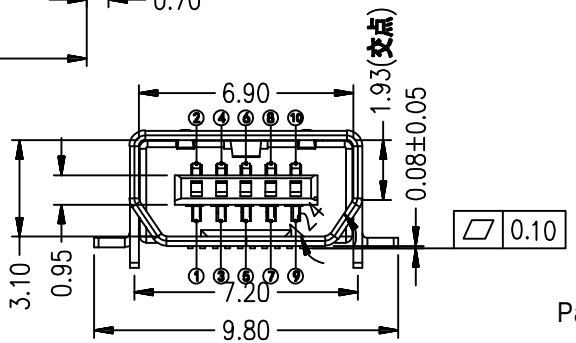

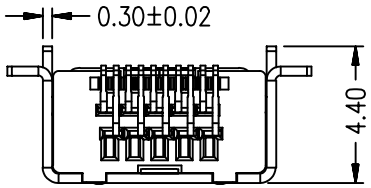

Pin Assignments

2	VBUS	1	RX
4	D−	3	TX
6	D+	5	MIC
8	FM	7	R
10	GND	9	L
PIN	SIGNAL NAME	PIN	SIGNAL NAME

Part number Information:

DW-MUB-S10091-XX TR-01

Terminal Plating
01:Gold Flash Plating on Mating Area
03:3u" Gold Plating on Mating Area
05:5u" Gold Plating on Mating Area
15:15u" Gold Plating on Mating Area
30:30u" Gold Plating on Mating Area

TR:Tape Reel

Series
01-99

ECN NO.	REV	DATE	DESCRIPTION	CHANGE	APPRO.
	A-0	2017.10.21	NEW	Aple	Rix

GENERAL TOLERANCE UNLESS OTHERWISE NOTED	
Angle	±2°
X.	±0.35
X.X	±0.35
X.XX	±0.25

DESIGN	Aple	2017.10.21
CHECK	Jason	2017.10.21
APPROVAL	Rix	2017.10.21

SCALE: N/A UNIT:mm A4 SHEET: 1 of 1

龍威電子有限公司
Dragon Well Ele Dragon Well Electronics Co.,Ltd

TITLE:	MINI USB 10P F SMT+DIP
MODEL NO.	DW-MUB-S10091-XXTR-01
FILE NO.	

THIS DRAWING CONTAINS INFORMATION THAT IS PROPRIETAPY TO DRAGON WELL AND SHOULD NOT BE USED WITHOUT WRITTEN PERMISSION