RoHS COMPLIANT

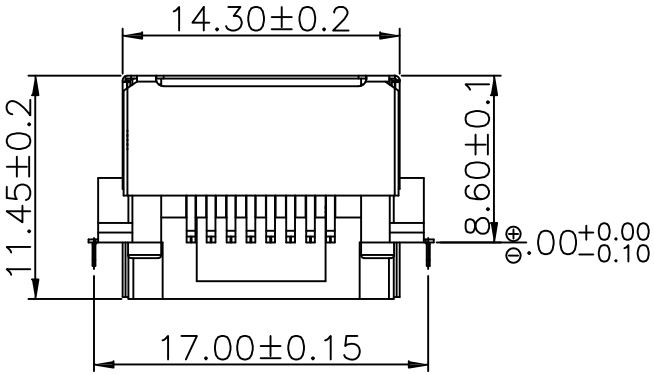

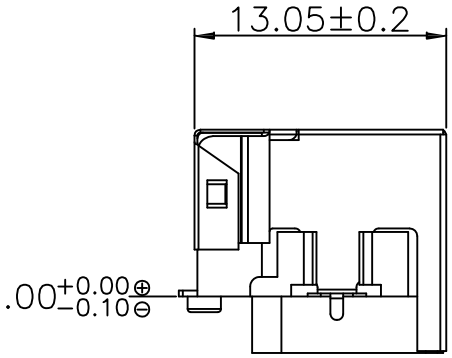

SPECIFICATION
1.Rating:AC 125V 1.5A.
2.Contact resistance≤20mΩ.
3.Insulastion resistance:1000MΩ(DC 500V).
4.Withstranding voltage:1000V AC 50Hz /mins'
ELECTRONICS:
1.Housing Material: LCP UL94V-0.
2.Contact Material: Phosphor Bronze
3. Contact Plating: Plating SEE Part Number
4.Shield: Brass
5.Shield:Nickel Plating
6.Mating/Unmating Force:3.06kg.F Max
7.Retention Strength:4.9Kg.F Min Between Jack And Plug.
8. Durability: 750 cycles Min.
ENVIRONMENTAL:
1. STORAGE TEMPERATURE : -10°C~+45°C RELATIVE HUMIDITY<70%
2. OPERATION TEMPERATURE : -40°C~+85°C

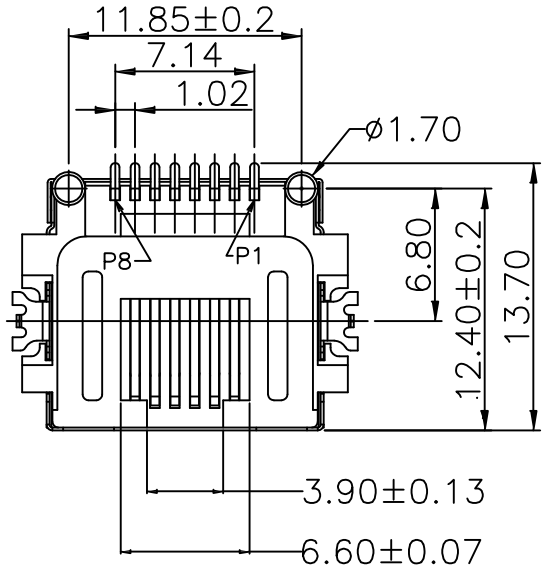

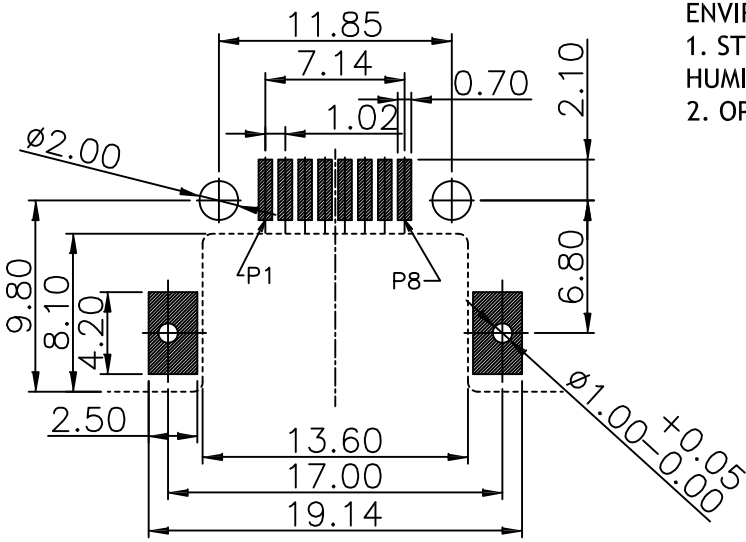

RECOMMENDED P.C.B.LAYOUT
ALL TOLERANCES ARE±0.05

Part number Information:

DW-RJ45 -S001115 - XX TR - 01

Connector Plating
01:Gold Flash Plating on Contact Area
03:3u" Gold Plating on Contact Area
05:5u" Gold Plating on Contact Area
15:15u" Gold Plating on Contact Area
30:30u" Gold Plating on Contact Area

TR:Tape Reel

Series
01-99

ECN NO.	REV	DATE	DESCRIPTION	CHANGE	APPRO.	GENERAL TOLERANCE UNLESS OTHERWISE NOTED					
						Angle	±2°	DESIGN	Aple	2015.03.08	
						X.	±0.25	CHECK	Jason	2015.03.08	
						X.X	±0.20				
———	A-0	2015.03.08	NEW	Michael	Rix	X.XX	±0.10	APPROVAL	Rix	2015.03.08	

SCALE: N/A UNIT:mm A4 SHEET: 1 of 1

龍威電子有限公司
Dragon Well Ele Dragon Well Electronics Co.,Ltd

TITLE: RJ45 沉板式8.60MM SMT 全包
MODEL NO. DW-RJ45-S001115-XXTR-01

THIS DRAWING CONTAINS INFORMATION THAT IS PROPRIETAPY TO DRAGON WELL AND SHOULD NOT BE USED WITHOUT WRITTEN PERMISSION