RoHS COMPLIANT

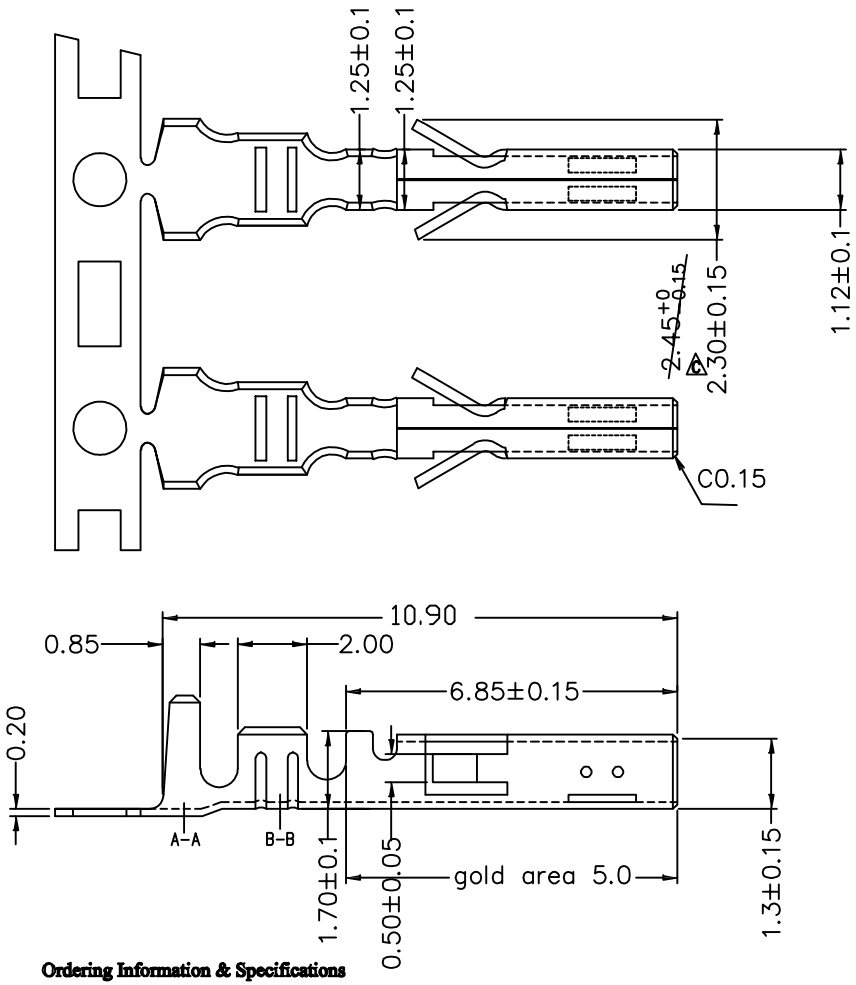

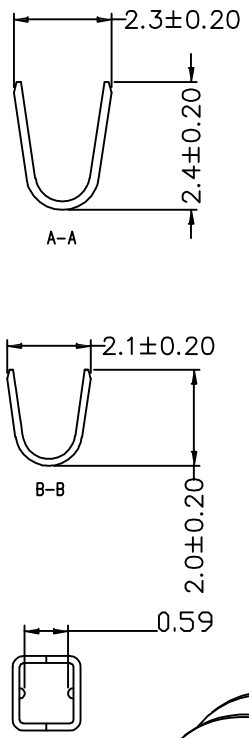

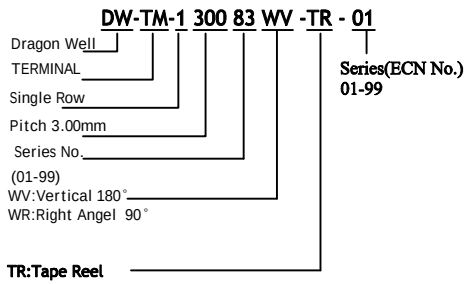

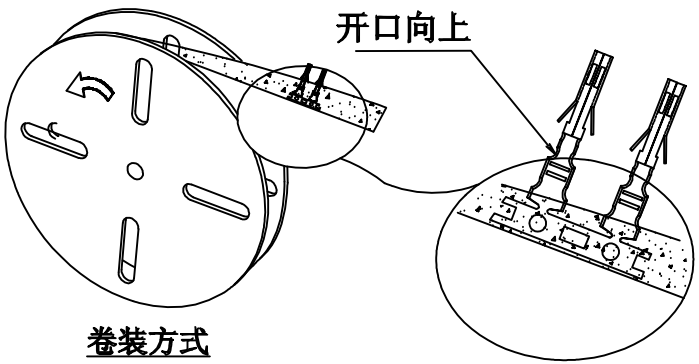

卷装方式

Ordering Information & Specifications

Wire Range	Insulation O.D.	Material	Finish	Qty/reel
AWG#20-#24	1.6mm(max)	Phosphor Bronze	Tin Plated	10,000pcs

ECN NO.	REV	DATE	DESCRIPTION	CHANGE	APPRO.
	A-0	2015.04.16	NEW	Michael	Rix

Angle	±2°
X.X	±0.35
X.XX	±0.30
X.XXX	±0.25

GENERAL TOLERANCE UNLESS OTHERWISE NOTED

DESIGN	Aple	2015.04.16
CHECK	Jason	2015.04.16
APPROVAL	Rix	2015.04.16

SCALE: N/A UNIT:mm A4 SHEET: 1 of 1

龍威電子有限公司
Dragon Well Ele Dragon Well Electronics Co.,Ltd

TITLE: 3.00mm Crimp Style connectors

MODEL NO. DW-TM-130083WV-TR-01

THIS DRAWING CONTAINS INFORMATION THAT IS PROPRIETAPY TO DRAGON WELL AND SHOULD NOT BE USED WITHOUT WRITTEN PERMISSION