RoHS COMPLIANT

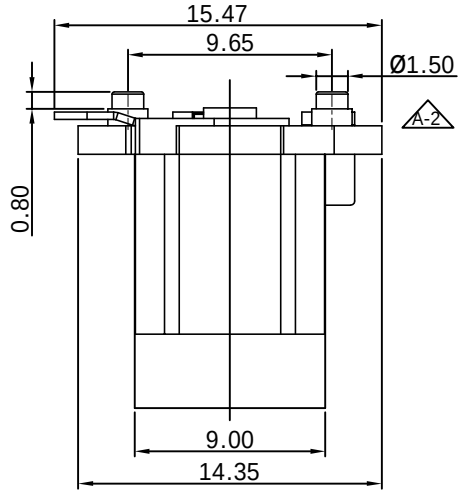

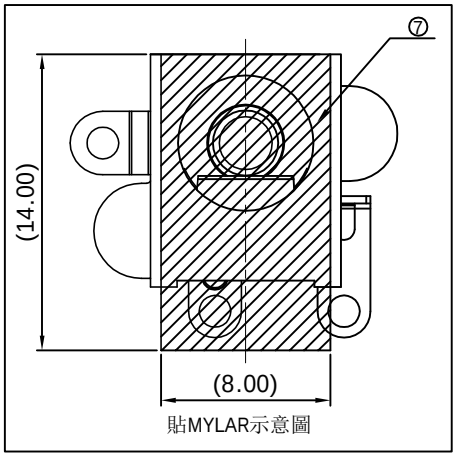

SPECIFICATIONS:

1. ELECTRICAL CHARACTERISTICS:
   1-1. RATING: 30V, 1A . A-1
   1-2. CONTACT RESISTANCE:
   50 MILLIOHMS Max. FOR INITIAL,
   80 MILLIOHMS Max. AFTER 5000 CYCLES.
   1-3. INSULATION RESISTANCE: 100 MEGAOHMS Min. BY 500V DC AFTER 1 MINUTE.
   1-4. DIELECTRIC WITHSTANDING VOLTAGE: 500V RMS AFTER 1 MINUTE.
2. MECHANICAL CHARACTERISTICS:
   2-1. INSERTION FORCE : 0.3~3.0 KGF(2.94~29.4N)
   2-2. WITHDRAWAL FORCE : 0.3~3.0 KGF(2.94~29.4N)
3. LIFE TEST: 5,000 CYCLES MIN.

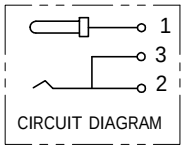

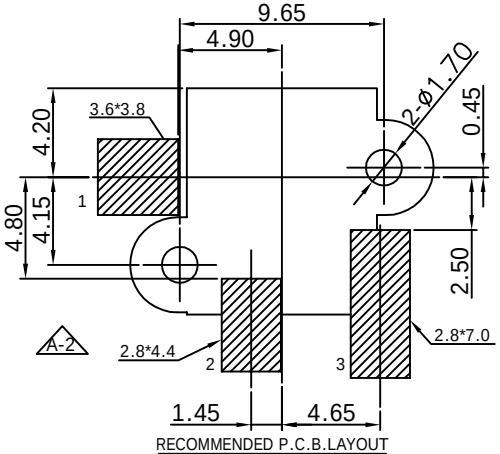

RECOMMENDED P.C.B.LAYOUT
ALL TOLERANCES ARE±0.05

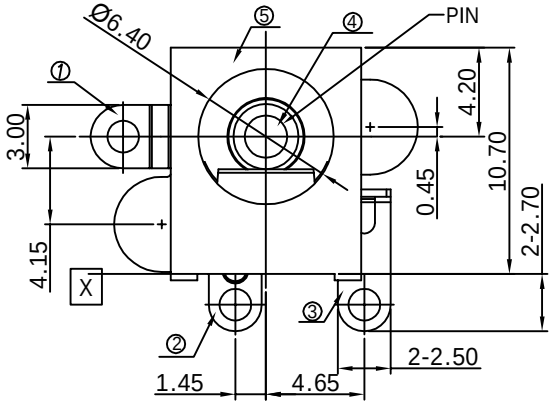

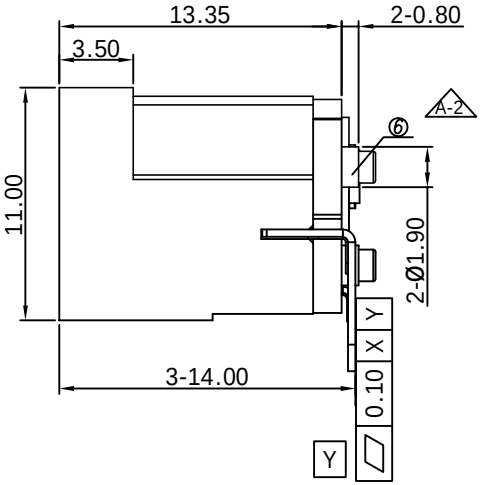

Part number Information:

DW-DJ-S200-X-02

DC JACK

PIN
2.0mm: Ø2.0
2.5mm: Ø2.5

Series
01-99

⑦	MYLAR	1	N/A	AMBER
⑥	COVER	1	HIGH TEMP.THERMOPLASTIC	Black
⑤	HOUSING	1	HIGH TEMP.THERMOPLASTIC	Black
④	CENTER PIN	1	BRASS Ø2.0	Ni-Plated
③	TERMINAL 3#	1	COPPER ALLOY t=0.35	Ag-Plated
②	TERMINAL 2#	1	COPPER ALLOY t=0.30	Ag-Plated
①	TERMINAL 1#	1	COPPER ALLOY t=0.35	Ag-Plated

ECN NO.	REV	DATE	DESCRIPTION	CHANGE	APPRO.
	A-2	2026.01.20	Update spec	Aple	Rix
	A-1	2026.01.16	Update spec	Aple	Rix
	A-0	2015.02.26	New	Aple	Rix

GENERAL TOLERANCE UNLESS OTHERWISE NOTED

Angle	±2°
X	±0.50
X.X	±0.30
X.XX	±0.20
X.XXX	±0.10

DESIGN	Aple	2026.01.20
CHECK	Jason	2026.01.20
APPROVAL	Rix	2026.01.20

SCALE: N/A UNIT:mm A4 SHEET: 1 of 1

龍威電子有限公司
Dragon Well Ele Dragon Well Electronics Co.,Ltd

TITLE: DC JACK

MODEL NO. DW-DJ-S200-X-02

THIS DRAWING CONTAINS INFORMATION THAT IS PROPRIETAPY TO DRAGON WELL AND SHOULD NOT BE USED WITHOUT WRITTEN PERMISSION